# REGIMENT BARRACKS INSTRUCTIONS

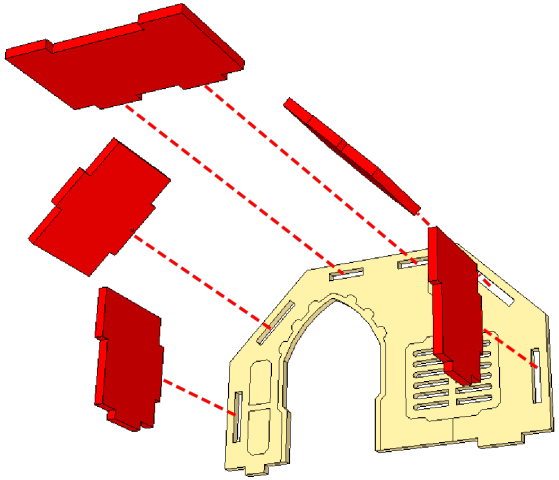

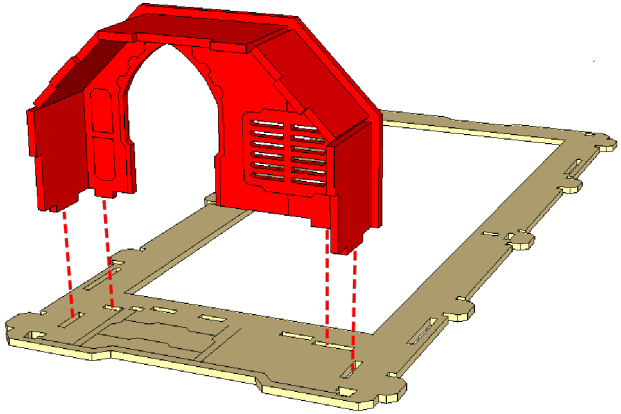

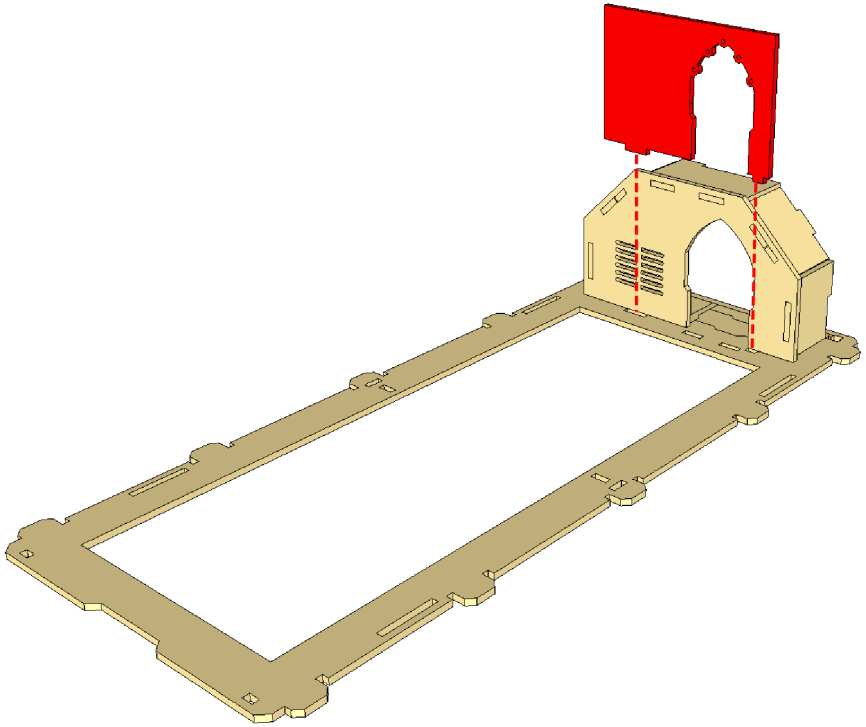

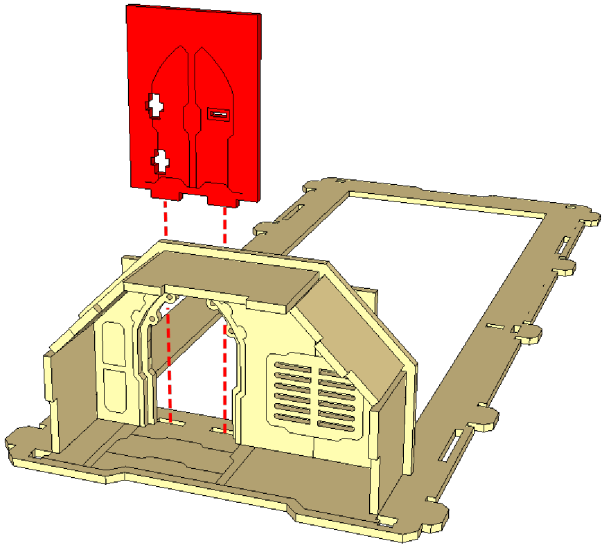



© Copyright Knights of Dice 2020 | knightsofdice.com

# REGIMENT BARRACKS INSTRUCTIONS



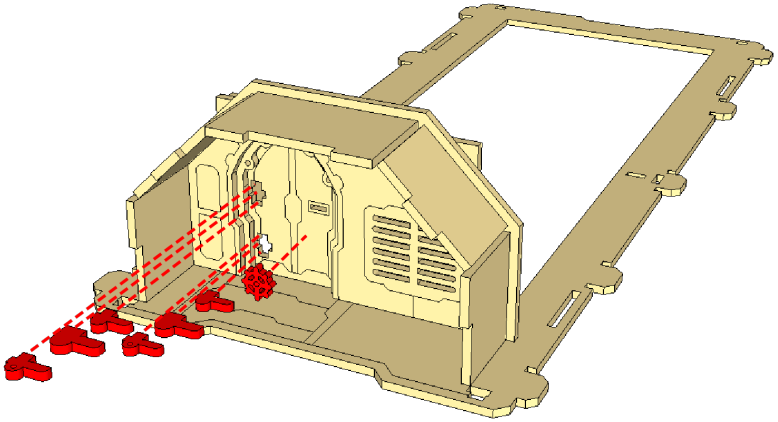

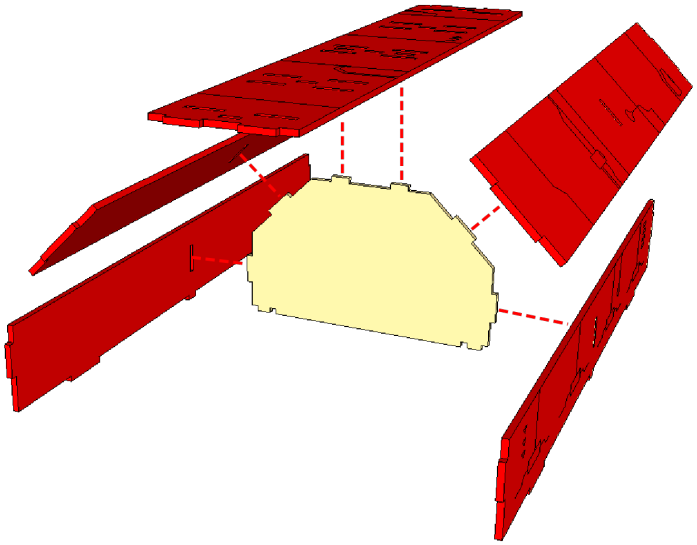

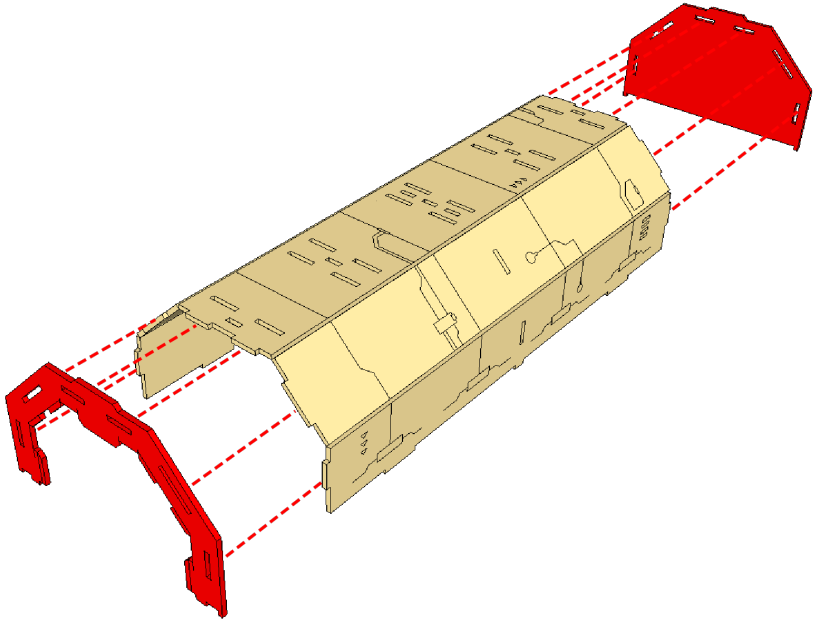

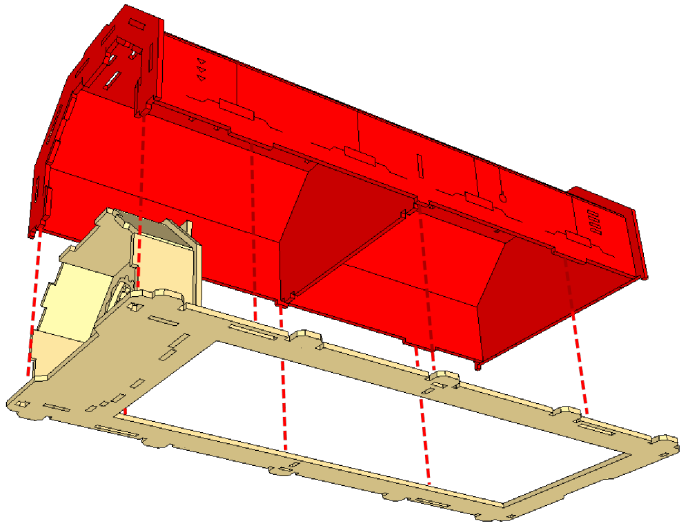



© Copyright Knights of Dice 2020 | knightsofdice.com

# REGIMENT BARRACKS INSTRUCTIONS



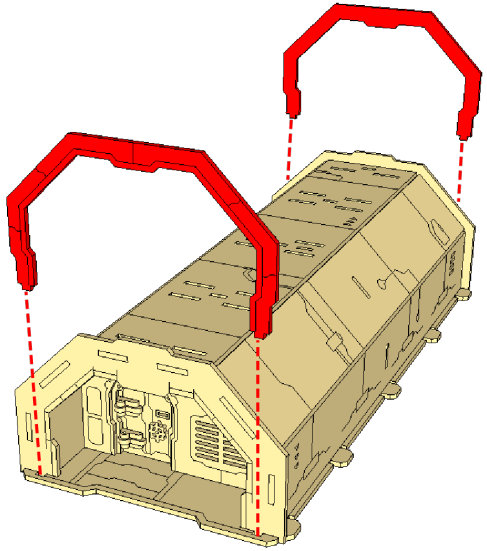

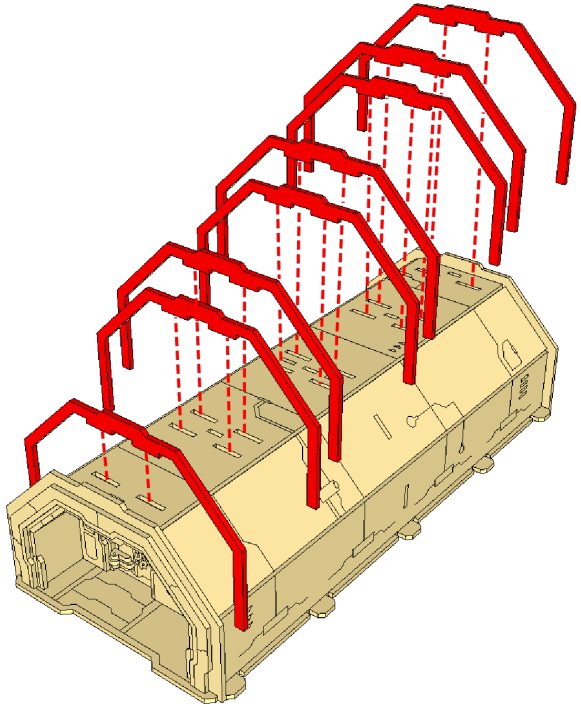

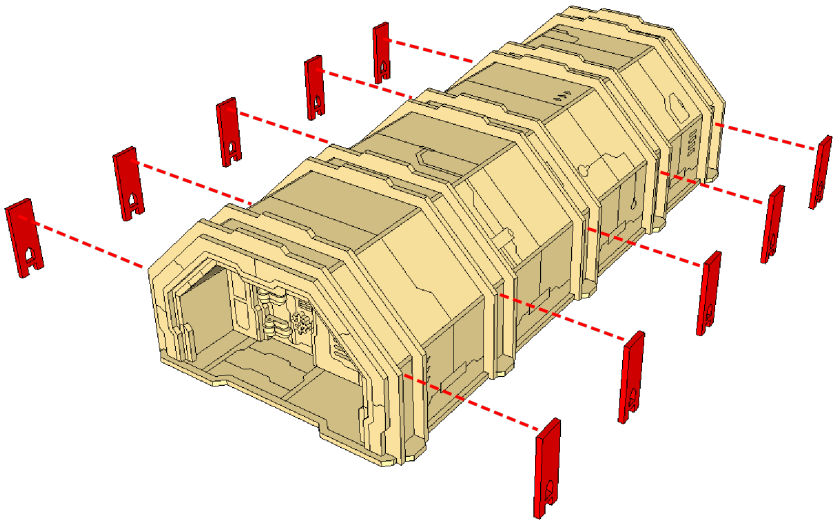



© Copyright Knights of Dice 2020 | knightsofdice.com

# REGIMENT BARRACKS INSTRUCTIONS



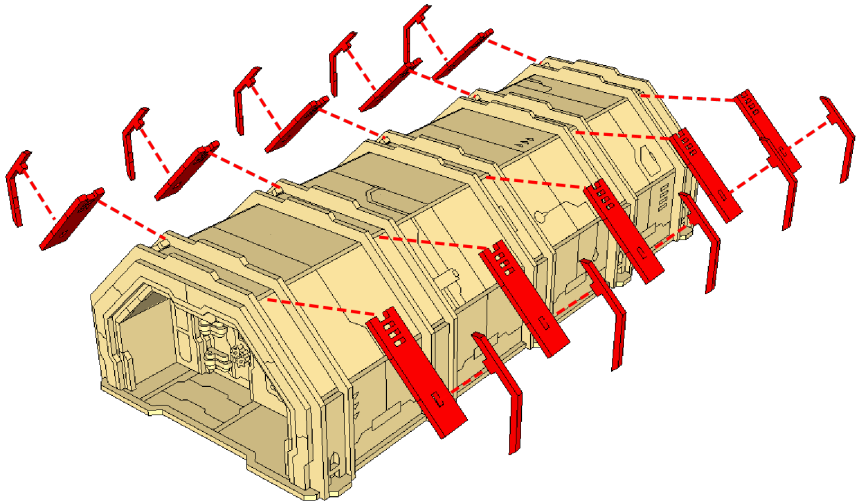

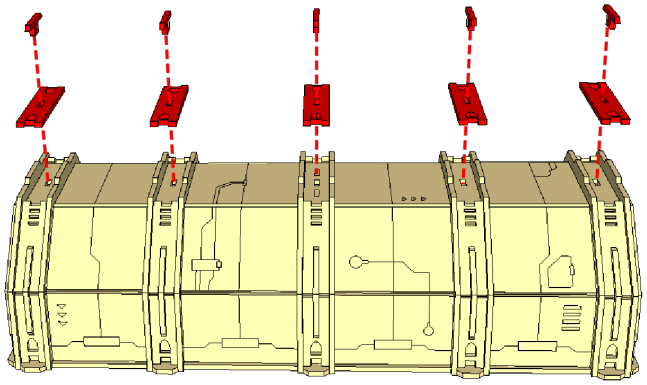

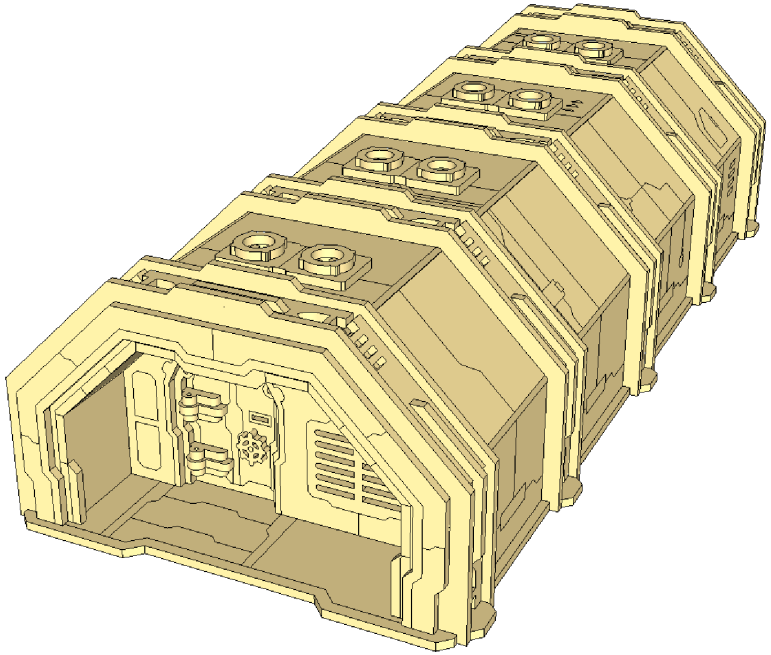



© Copyright Knights of Dice 2020 | knightsofdice.com