SQUAD BARRACKS INSTRUCTIONS

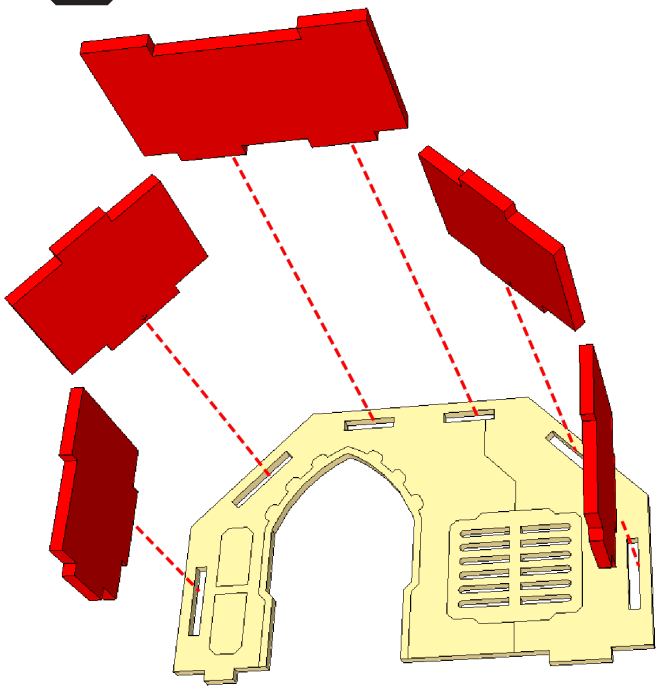

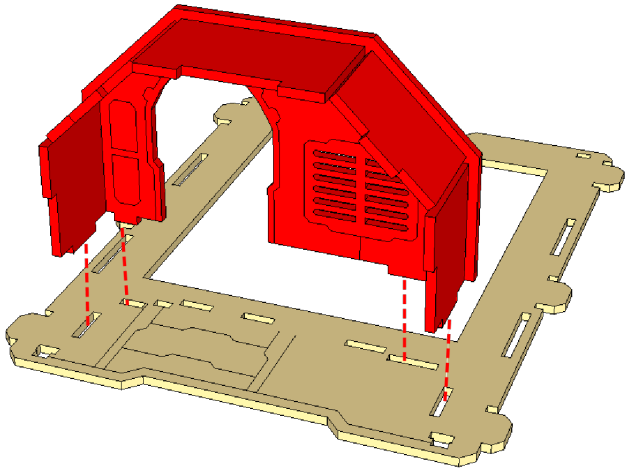

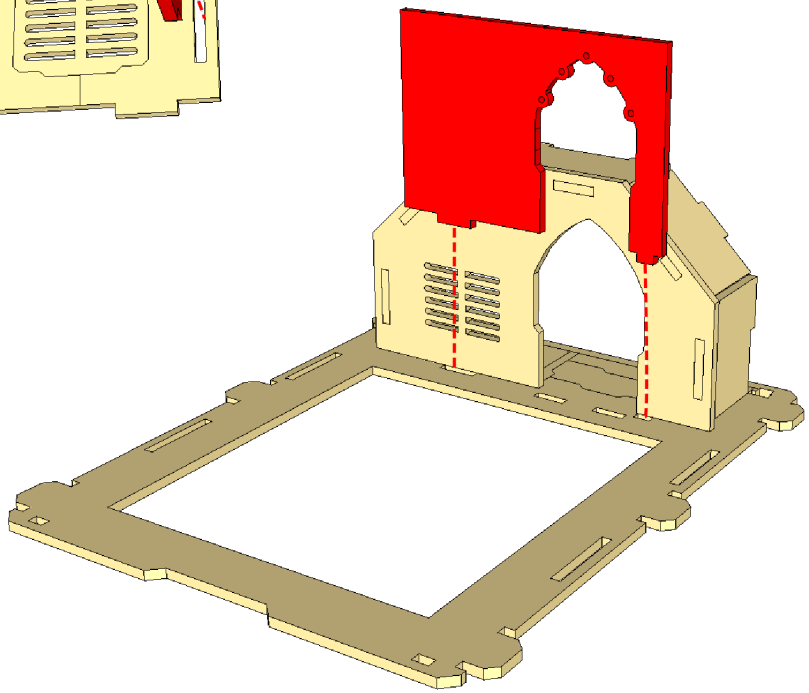

© Copyright Knights of Dice 2020 | knightsofdice.com

SQUAD BARRACKS INSTRUCTIONS

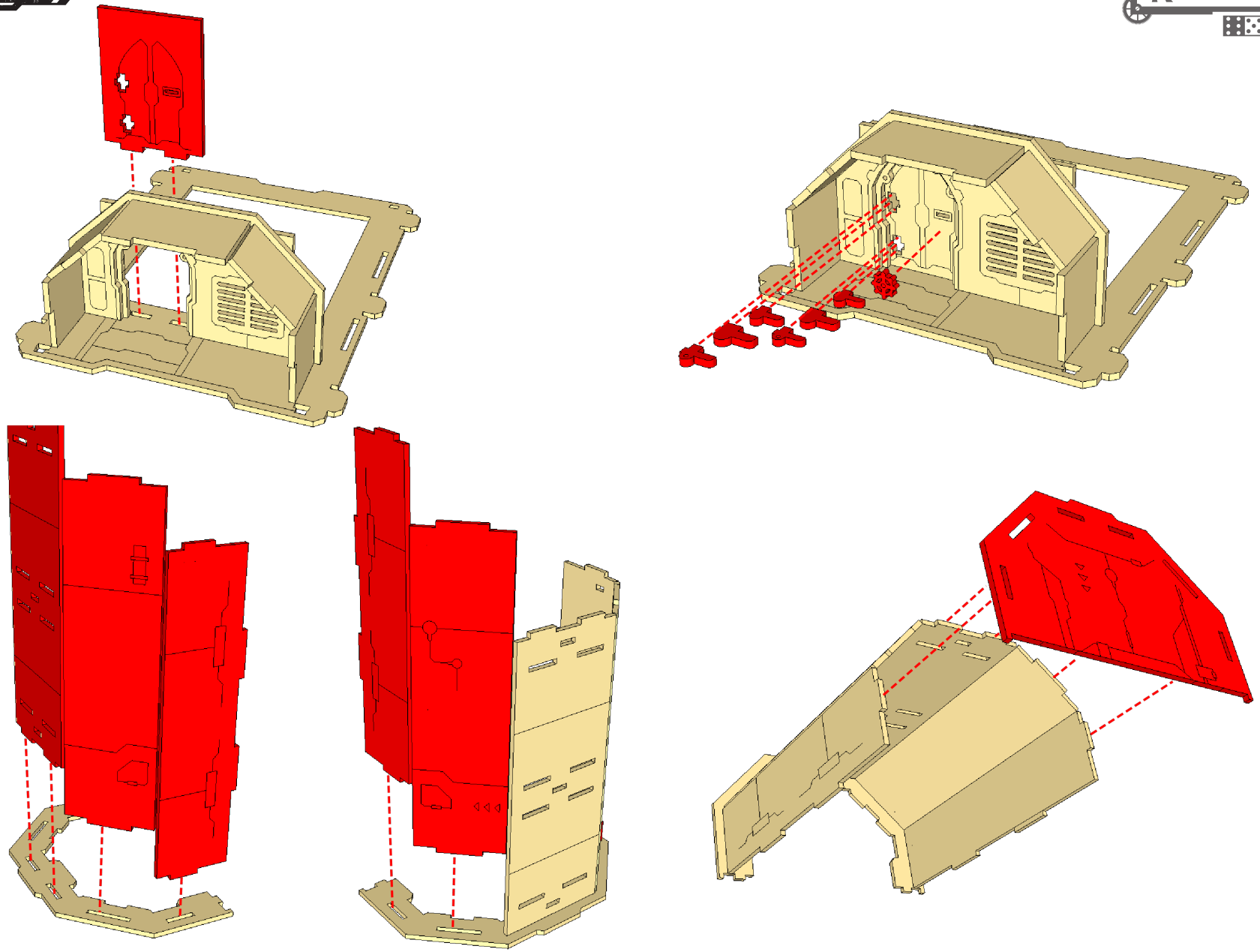

© Copyright Knights of Dice 2020 | knightsofdice.com

SQUAD BARRACKS INSTRUCTIONS

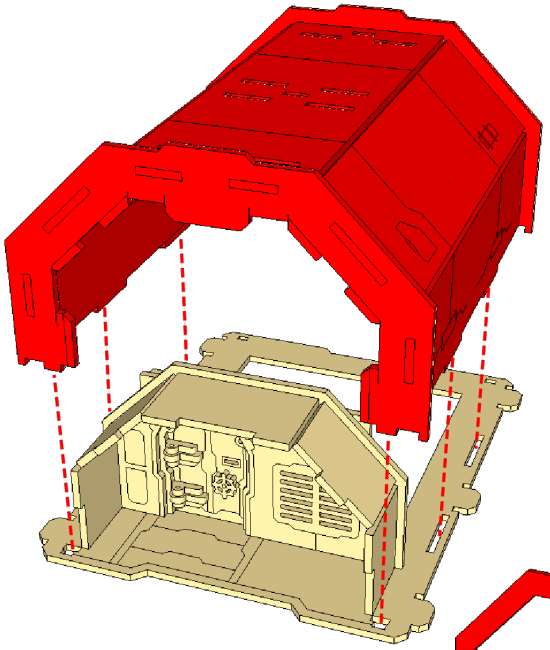

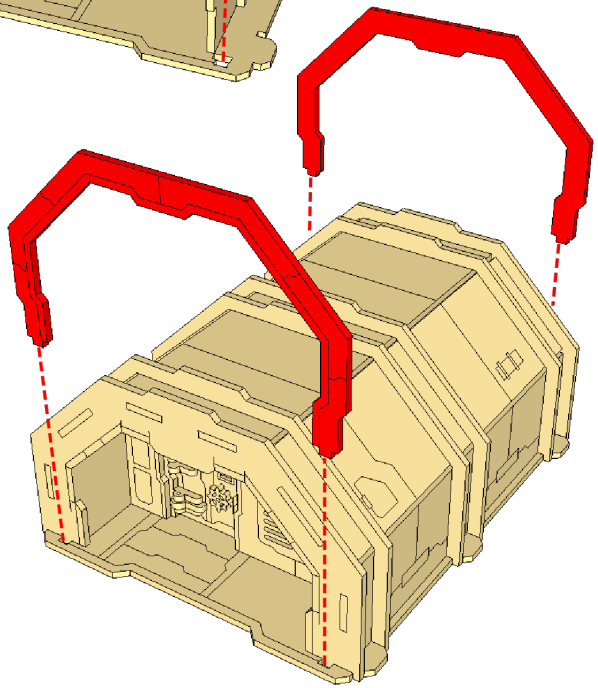

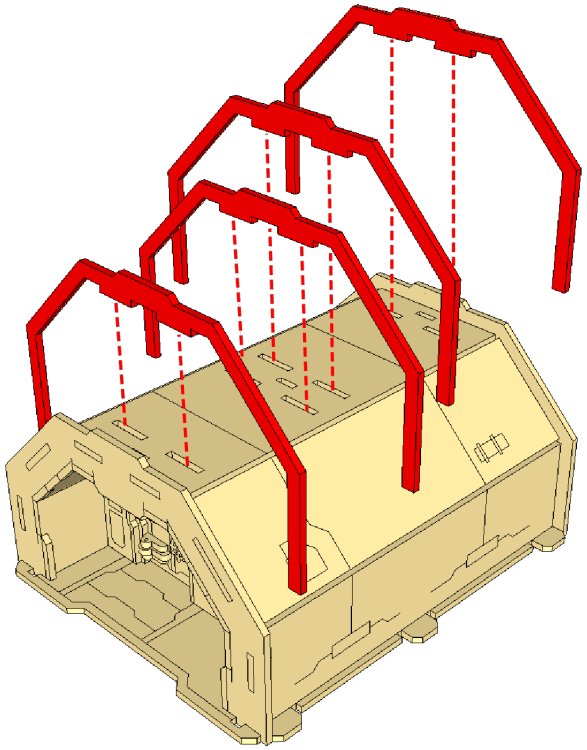

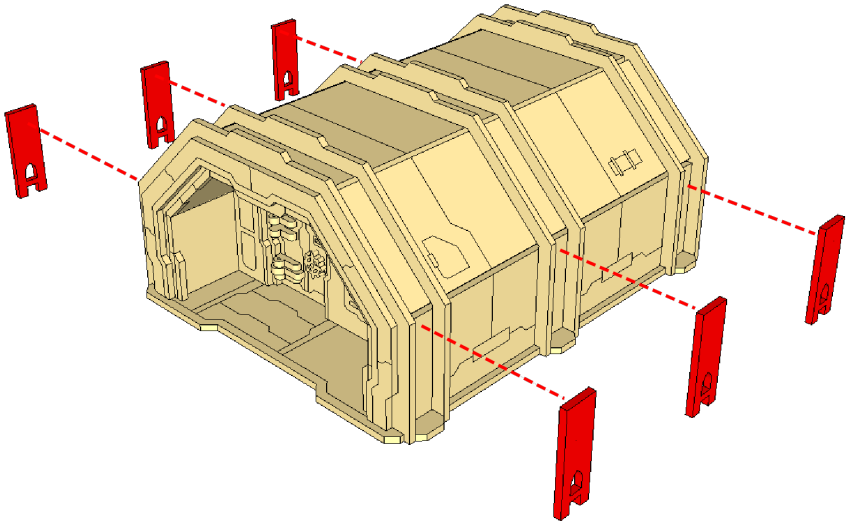

© Copyright Knights of Dice 2020 | knightsofdice.com

SQUAD BARRACKS INSTRUCTIONS

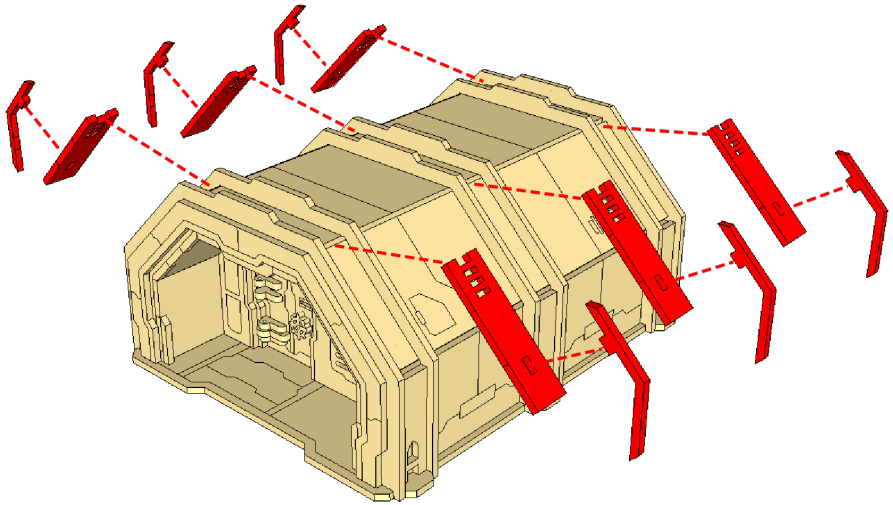

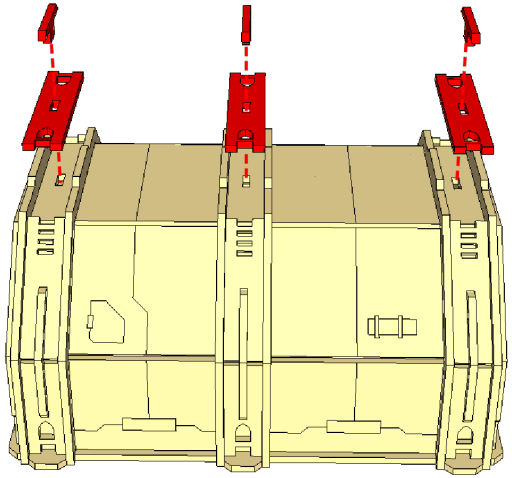

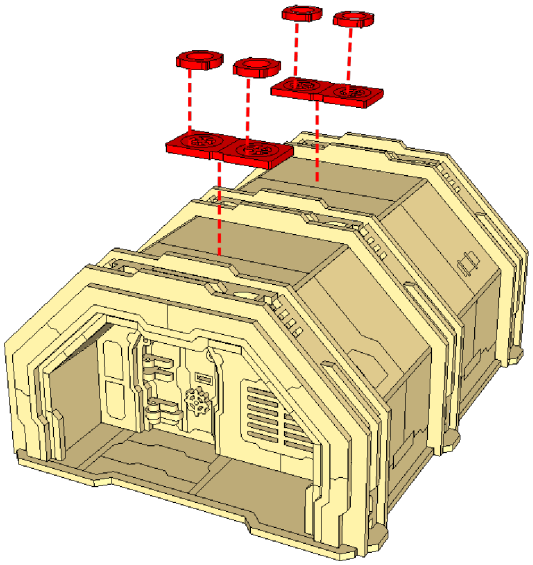

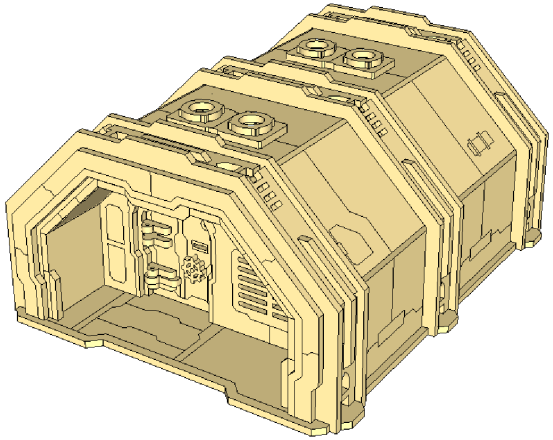

© Copyright Knights of Dice 2020 | knightsofdice.com